NOTES: UNLESS OTHERWISE SPECIFIED

1. ALL DIMENSIONS ARE IN INCHES.
2. AREA DRAIN BODY MATERIAL: 12GA STAINLESS STEEL T316
3. SPECIFYING ENGINEER IS RESPONSIBLE FOR CONCRETE ENCASEMENT AND REINFORCING BASED UPON APPLICATION AND LOCAL CODES.
4. REFER TO https://info.slotdrainsystems.com/installresources FOR INSTALLATION INSTRUCTIONS.

REVISIONS			
REV	DESCRIPTION	DATE	BY
0	INITIAL RELEASE – R0	10/10/2023	DK
1	UPDATED WITH GLOBAL DRAIN TEMPLATE	8/21/2024	DK

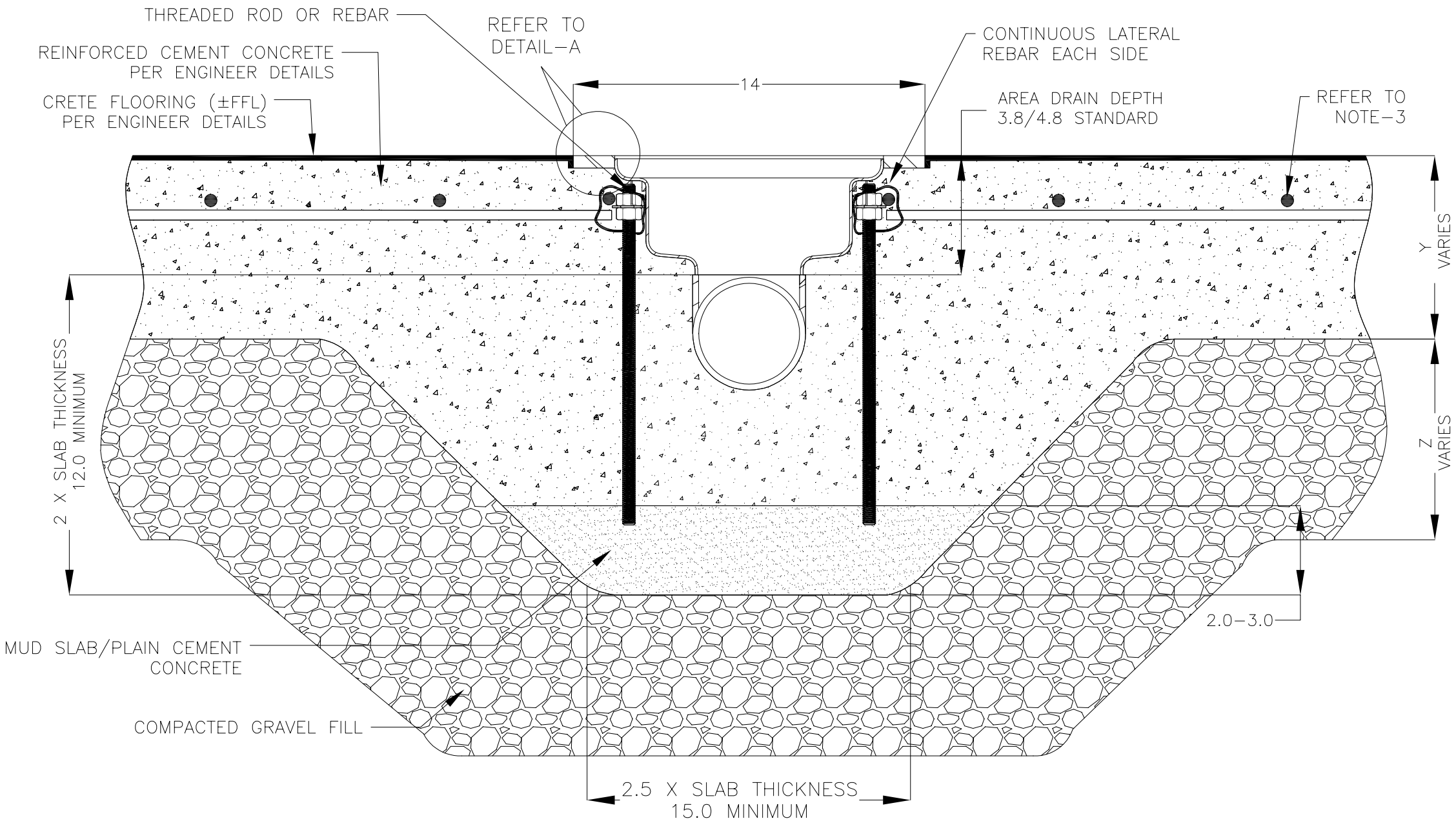

FOOD SAFE SHALLOW ROUND AREA DRAIN INSTALLATION DETAILS

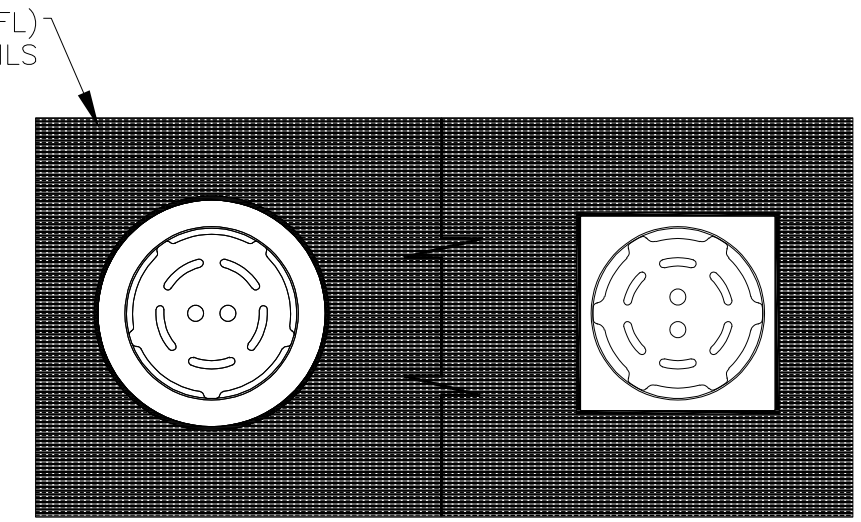

PLAN VIEW

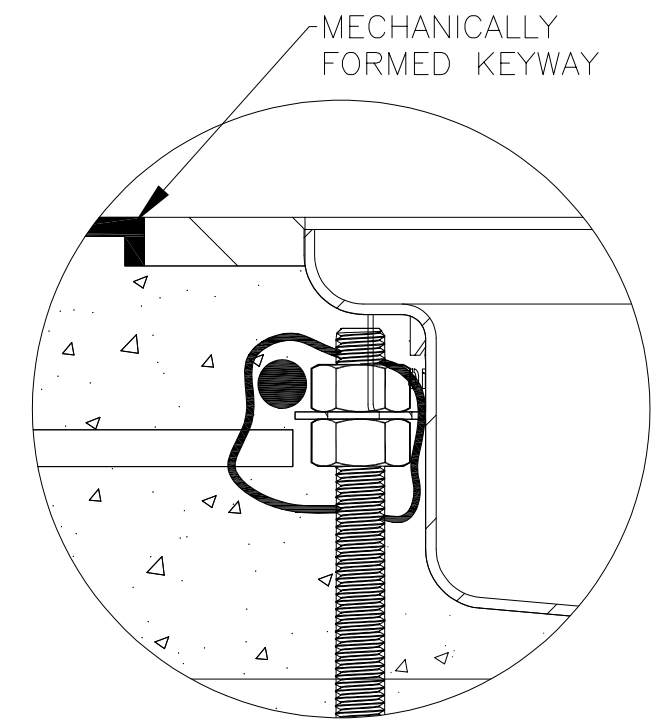

DETAIL–A

GLOBAL DRAIN TECHNOLOGIES

DRAWING TITLE				
CRETE FLOOR–NEW CONSTRUCTION INSTALLATION				
DRAIN SERIES				REV.
FOOD SAFE ROUND SHALLOW AREA DRAIN				1
DWG NO.	SIZE	SCALE	SHEET	
IN–FSAD–SH–001–R1	B	NTS	1 OF 1	

ALL DRAWINGS ARE THE EXCLUSIVE PROPERTY OF SLOT DRAIN SYSTEMS. ANY REPRODUCTION IN PART OR IN WHOLE IS PROHIBITED WITHOUT PROPER CONSENT.